LED T5 Tube

SPECIFICATION

Introduction

Light Emitting Diode (LED) T5 Series

Environmentally Conscious

Energy efficient, lead free, and long life means fewer lamp replacements vs. standard halogen bulb and incandescent light sources.

Outstanding Energy Efficiency

Compare to standard Incandescent light sources, LED T5 Series reduce energy consumption by 70%-80%. The lamps' optics concentrate light on the target, diminishing wasted extraneous light and increases the CBCP.

Long Life = Labor Savings

Delivers at least 70% of initial light output after at last 50,000 hours.

Various Colors

Cool White (5000-10000K)
Neutral White (3700-5000K)
Warm White (2600-3700K)

Excellent Color Rendering

Cool White: CRI > 70
Neutral White: CRI > 75
Warm White: CRI > 80

Contents

Introduction 2
LED T5 with Prismatic Lens 3
Packing 4
Installation 5
General Precautions 6
Warranty and Liability Information 6

Features:

- 100-240 V AC Input
- White color: 2700K~8000K Color Temperature
- Standard G5 Base

Applications:

- General Illumination
- Safety and Security
- Backlighting
- Sign and Decoration Lighting

General Dimensions

Length	A
1.4 feet	432 mm
3 feet	904 mm
4 feet	1204 mm

Absolute Maximum Ratings

Parameter	Rating	Unit	Condition
AC	100-240	V	Ta =25°C (77°F)
Operating Temperature	-20 ~ +50 (-4~ 122)	°C (°F)	
Storage Temperature	-40 ~ +80 (-40 ~ 176)	°C (°F)	
Power Factor	⩾0.90	%	
Median Life Expectancy	50,000	Hours	
Median Life Expectancy	20,000	Hours	Ta =50°C (122°F)

Optical Characters——Cool White (5500-8000K)							
Part No.	Length	Power (W)	LED Quantity (5050 SMD LED)	Luminosity (lm)	Base	CCT （K）	Beam Angle （Deg）
PLSO-LVL-T5-1AXW27-CP	1.4 feet	6	27	350	G5	3000~8500	180
PLSO-LVL-T5-1AXW54-CP	3 feet	13	54	800	G5	3000~8500	180
PLSO-LVL-T5-1AXW72-CP	4 feet	16	72	1100	G5	3000~8500	180

Packing

Individual package （With fiber container）				
Length （feet）	Unit weight (Kg)	Q'ty (pcs/package)	Packing weight (Kg)	Packing size (CM)
1.4	0.14	20	11.5	50.4X59X15.5
3	0.3	20	17.5	98.5X59X15.5
4	0.4	20	23.5	127.8X59X15.5

Individual package （With fiber container）				
Length （feet）	Unit weight (Kg)	Q'ty (pcs/package)	Packing weight (Kg)	Packing size (CM)
1.4	0.14	20	6.9	51.5X38X17
3	0.3	20	11.4	99.5X38X17
4	0.4	20	15.5	128.5X38X17

Installation

Standard accessories：

4feet 90º Power Cord

Wood screw and mounting clips

Connection：

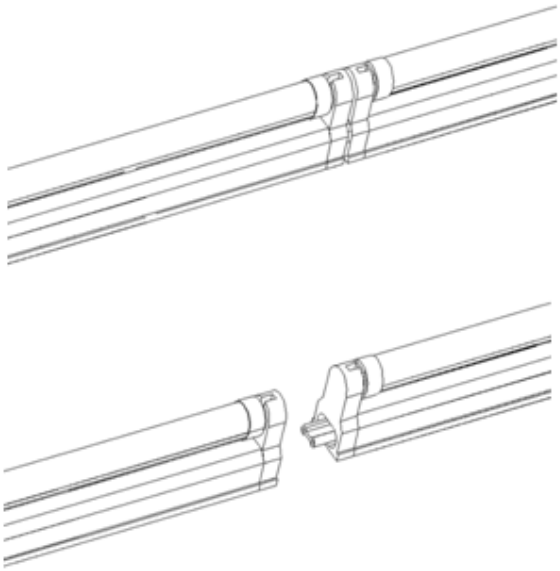

Max Connection： 6 Units

Precautions

- LEDs are static sensitive devices. Precautions should be taken to ensure that LEDs are well protected from ESD during handling.
- ESD protection for GaP and AlGaAS based chips is still necessary even though the chips are safe in low static-electric discharge events
- AlInGap, GaN and/or InGaN based chips are STATIC SENSITIVE devices and ESD protection must be taken into consideration in the initial design stages.
- Do not operate LEDs in reverse bias.

Warranty and Liability Information

- Two years limited warranty.
- The information contained herein is presented only as a guide for the applications of our products.
- No responsibility is assumed by P-TEC for any infringements of intellectual property or other infringements of the rights of third parties that may result from its use.
- P-TEC is committed to a process of continuous improvements of the quality and the features of its products and reserves the right to make changes that result in such improvements.
- Our factory's products are not intended for use in applications where extraordinarily high reliability is required to prevent the loss of human life or where failure could result in bodily injury.
- P-TEC limits the extent of our liability to the initial component cost and will, in the event of a failure, replace a failed component or refund the purchase price at P-TEC option.