PRODUCT SPECIFICATION

Part Number **PC894-O**

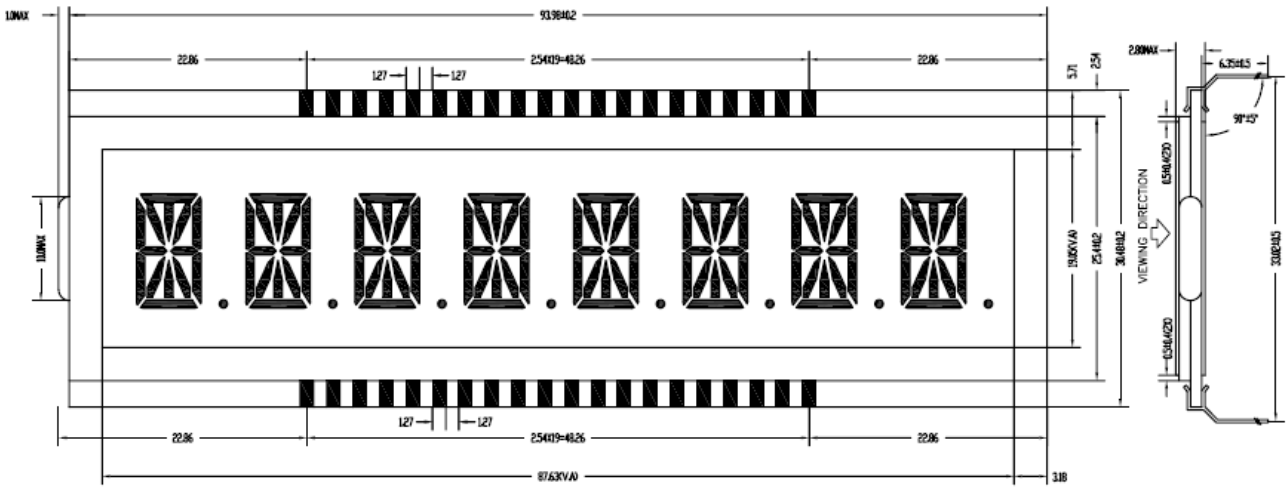

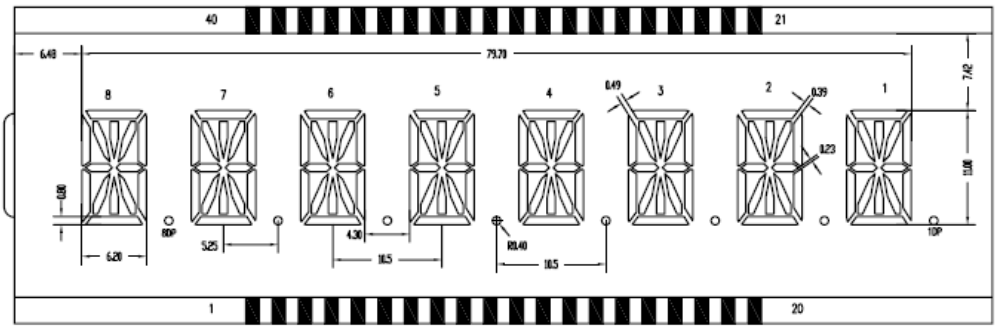

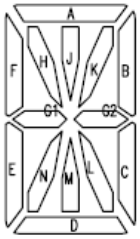

PIN	1	2	3	4	5	6	7	8	9	10	11	12	13	14	15	16	17	18	19	20	21	22	23	24	25	26	27	28	29	30	31	32	33	34	35	36	37	38	39	40
COM1			8J		7J		6J		5J			4J			3J		2J		1J		COM1	1A	1H	2A	2H	3A	3H	4A		4H		5A	5H	6A	6H	7A	7H	8A	8H	
COM2		8F	8K	7F	7K	6F	6K	5F	5K	4F		4K		3F	3K	2F	2K	1F	1K			1B	1G1	2B	2G1	3B	3G1	4B		4G1		5B	5G1	6B	6G1	7B	7G1	8B	8G1	COM2
COM3	COM3	8E	8G2	7E	7G2	6E	6G2	5E	5G2	4E		4G2		3E	3G2	2E	2G2	1E	1G2			1C	1N	2C	2N	3C	3N	4C		4N		5C	5N	6C	6N	7C	7N	8C	8N	
COM4		8D	8L	7D	7L	6D	6L	5D	5L	4D		4L		3D	3L	2D	2L	1D	1L	COM4		1DP	1M	2DP	2M	3DP	3M	4DP		4M		5D	5M	6D	6M	7DP	7M	8DP	8M	

NOTES:

1. DISPLAY TYPE: TN
2. VIEWING DIRECTION: 12:00
3. POLARIZER MODE: POSITIVE/TRANSFLECTIVE
4. DRIVER METHOD: 1/4 DUTY 1/3 BIAS
5. OPERATING VOLTAGE: 5.0 V
6. OPERATING TEMP: -20°C~80°C
7. STORAGE TEMP: -40°C~80°C
8. CONNECTOR: PIN

	Approved By	Checked By	Prepared By
Customer Approval Signatures			

Record Of Revisions		
Rev.0 01.13.24	JAS	Layout Start
Rev.1 03.24.15	JAS	Logo update