PRODUCT SPECIFICATION

Part Number

PDM57116x-W01

Details

- 1.16” (30.32mm) Dot Matrix Display
- 5x7 Array
- Available in Common Anode or Cathode
- Emitting Color: White

Features

- Low power consumption
- RoHS Compliant
- Gray or Black Face, White Segment
- Easy mounting on PCB or socket

Mechanical Dimensions

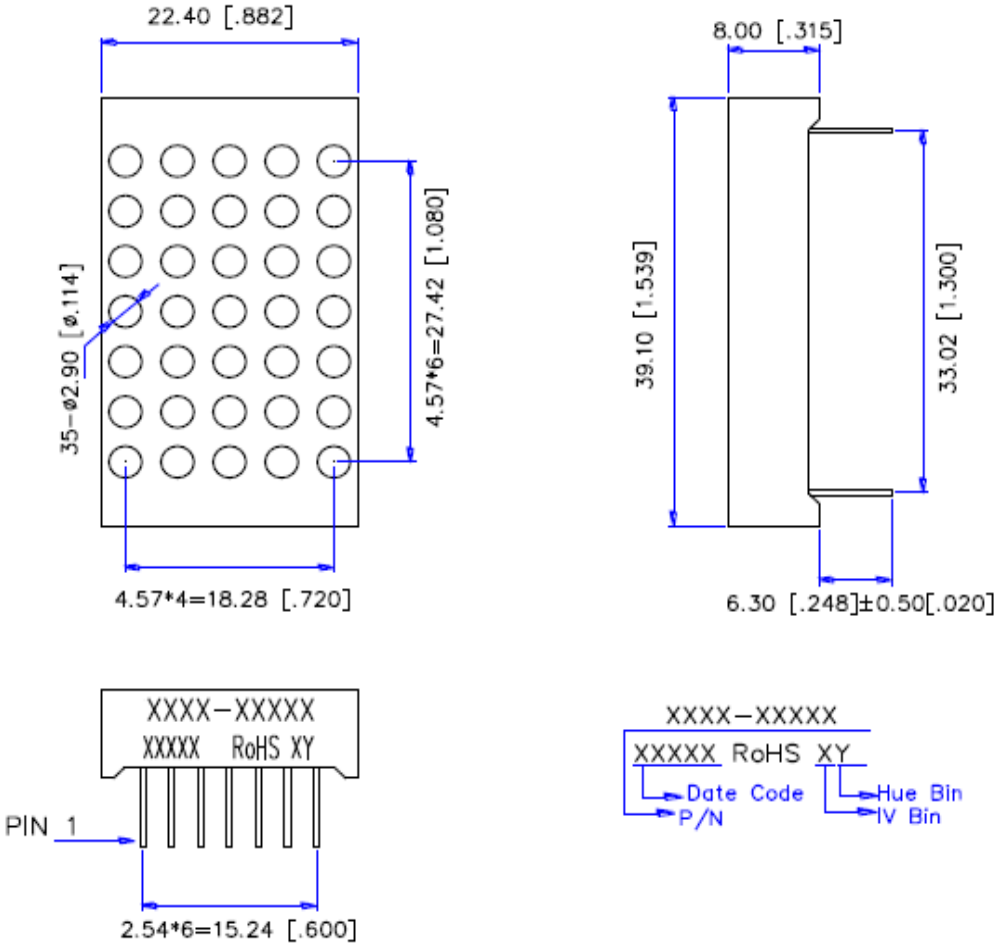

Notes:
1. Dimensions in millimeters [inch], and tolerance is ±0.25 [.010] and angle is ±1° unless otherwise noted.
2. Bending ≤ Length*1%
3. All pins are ⌀0.50[.020]±0.1[.004]
4. Specifications subject to change without notice.

Device Selection Guide

Model Number	Chip		Description
	Material	Emitting Color	
PDM57116C-W01	InGaN	White	Common Cathode
PDM57116A-W01			Common Anode

Absolute Maximum Ratings at Ta=25°C

Parameter	Symbol	Rating	Unit
Power Dissipation per Dice	P_{AD}	114	mW
Derating Liner from 25°C per Dice	--	0.4	mA/°C
Continuous Forward Current Per Dice	I_{AF}	30	mA
Peak Current Per Dice (duty cycle 1/10, 1KHz)	I_{PF}	100	mA
Reverse Voltage Per Dice	VR	5	V
Electrostatic Discharge (HBM)	ESD	1500	V
Operating Temperature	Topr	°C	
Storage Temperature	Tstg	°C	

Typical Electrical and Optical Characteristics at Ta=25°C

Parameter	Symbol	Chip	Min.	Typ.	Max.	Unit	Condition
Forward Voltage Per Segment	VF	W01	--	3.2	3.8	V	IF=20mA
Luminous Intensity Per Segment	Iv	W01	--	200	--	mcd	IF=10mA
Chromaticity Coordinates (Tolerance: ±0.01)	X/Y	W01	--	0.27/.025	--	nm	IF=10mA
Reverse Current	I_R		--	--	50	µA	VR=5V
Luminous Intensity Matching Ratio	Iv-m		--	--	2:1	--	IF=10mA

Typical Electrical/Optical Characteristic Curves

(Ta = 25℃ Unless Otherwise Noted)

Fig 1. Forward Current
Vs. Ambient Temperature

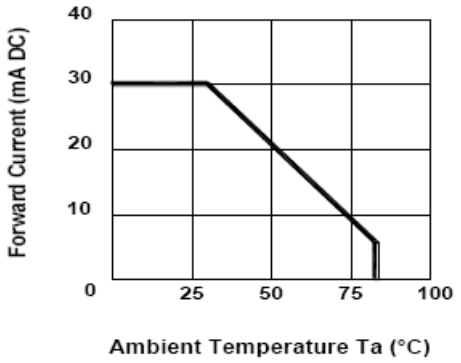

Fig 2. Forward Current
Vs. Forward Voltage

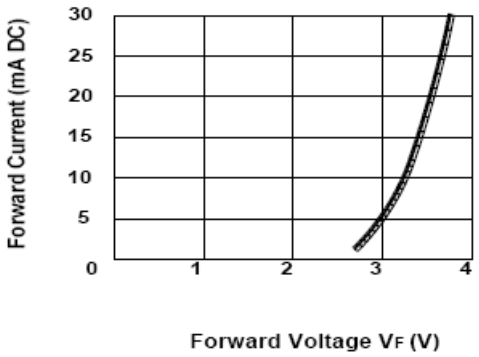

Fig 3. Relative Intensity
Vs. Forward Current

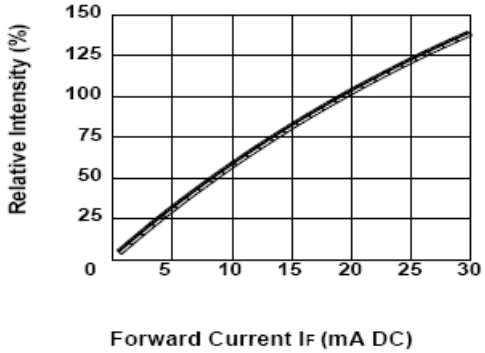

Fig 4. Peark Forward Voltage
Vs.Forward Current
(100us test pulse,1% duty cycle)

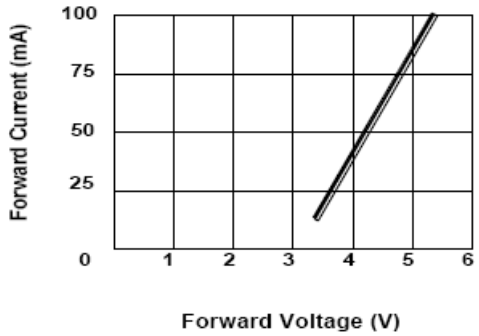

Fig 5. Relative Intensity Vs. Wavelength

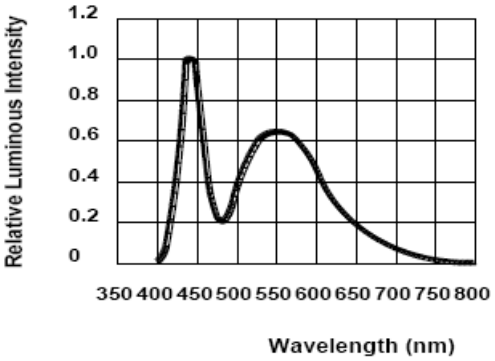

Luminous General Iv Bin Grade (IF = 10mA)

A	B	C	D	E	F	G	H	J	K	L	M
0.627	0.816	1.062	1.382	1.797	2.337	3.039	3.952	5.138	6.681	8.686	11.293
I	I	I	I	I	I	I	I	I	I	I	I
0.815	1.061	1.381	1.796	2.336	3.038	3.951	5.137	6.680	8.685	11.292	14.681

N	P	Q	R	S	T	U	V	W	X	Y	1
14.682	19.088	24.815	32.261	41.940	54.523	70.881	92.146	119.791	155.730	202.450	263.185
I	I	I	I	I	I	I	I	I	I	I	I
19.087	24.814	32.260	41.939	54.522	70.880	92.145	119.790	155.729	202.449	263.184	342.141

2	3	4	5	6	7	8	9
342.142	444.786	578.222	751.690	977.198	1270.359	1651.467	2146.908
I	I	I	I	I	I	I	I
444.785	578.221	751.689	977.197	1270.358	1651.466	2146.907	2790.981

Remark: Unit=mcd

*Tolerance: ±20%

Color Rank Limits (IF=10mA)

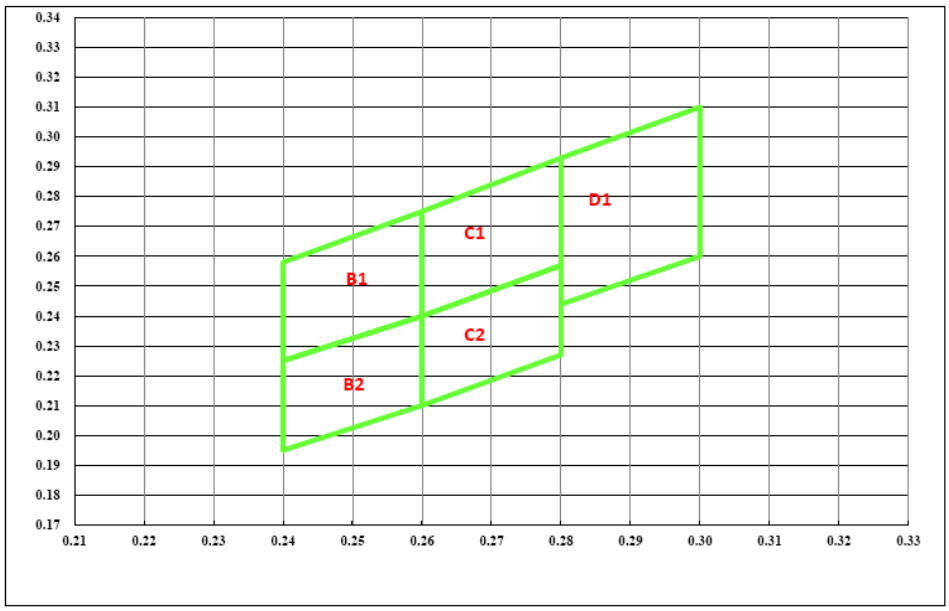

B1				
X	0.240	0.240	0.260	0.260
Y	0.225	0.258	0.275	0.240

B2				
X	0.240	0.240	0.260	0.260
Y	0.195	0.225	0.240	0.210

C1				
X	0.260	0.260	0.280	0.280
Y	0.240	0.275	0.293	0.257

C2				
X	0.260	0.260	0.280	0.280
Y	0.210	0.240	0.257	0.227

D1				
X	0.280	0.280	0.300	0.300
Y	0.244	0.293	0.310	0.260

All Light-On Segments Feature & Pad Position

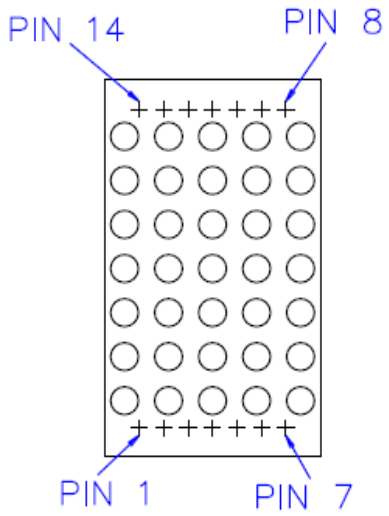

Internal Circuit Diagram

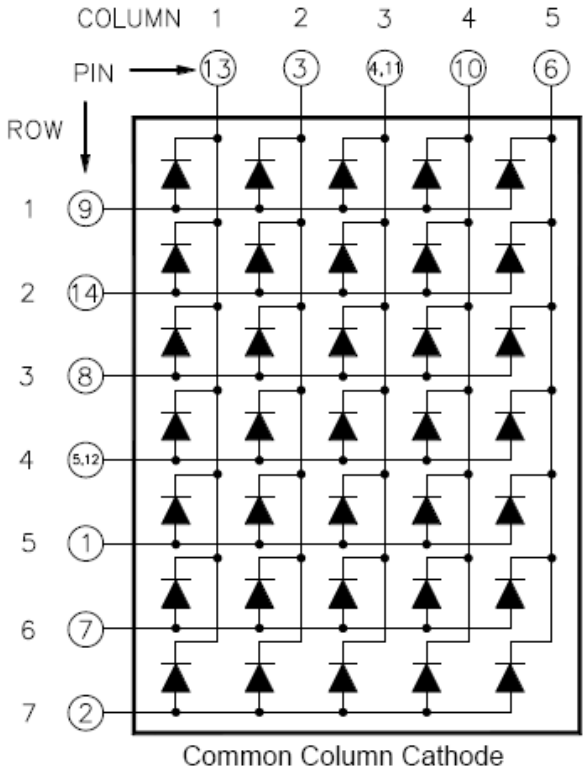

Common Column Cathode

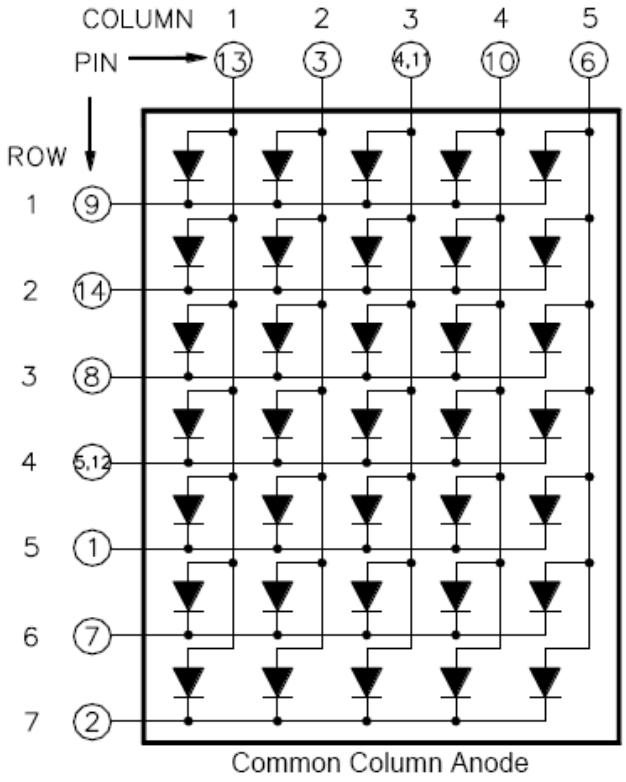

Common Column Anode

Precautions for Use

1. Recommended soldering conditions
   1.1. Wave soldering

   Basic SPEC is ≤ 5sec. When 260°C. If temperature is higher, time should be shorter (+10°C→ -1sec.).

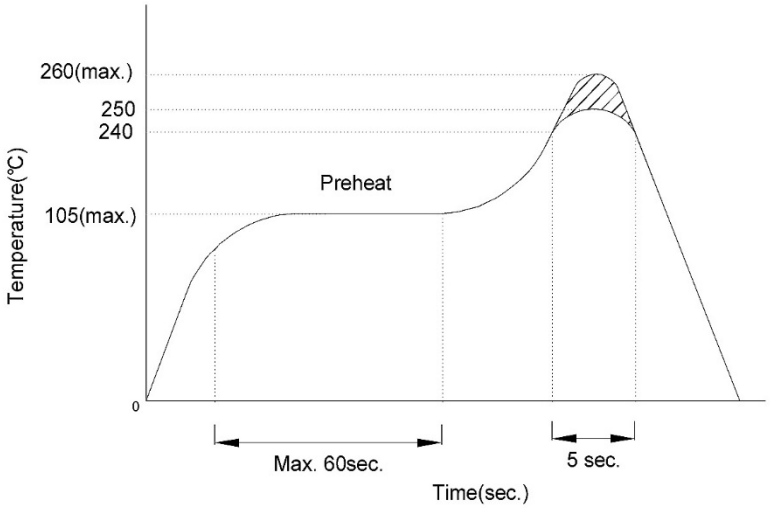

   1.2. Soldering Iron:
   Power dissipation of iron should be smaller than 15W and temp should be controllable. Soldering temperature should be under 260°C, time ≤ 3sec.

Packing Dimensions

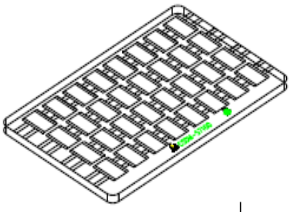

1 Tray From Box = 32 PCS
Tray Size:
L300 x W190 x H18mm

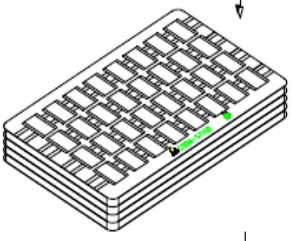

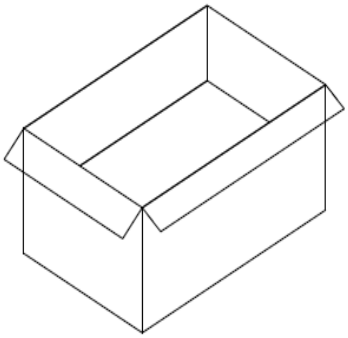

12 Trays Per Inner Box
Q'TY: 384 PCS.
Box Size:
L300 x W205 x H240mm

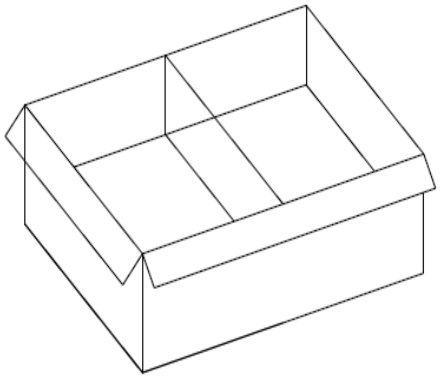

2 Inner Boxes Per Carton.
Total Q'TY: 768 Pcs
Carton Size:
L431 x W320 x H252mm